Manufacturer's warranty obligations and warranty service rules

The manufacturer guarantees that the product purchased by you and indicated in the warranty card (hereinafter referred to as the "Product") is complete, has no mechanical damage and meets the quality and safety standards established at the time of purchase.

1. Completeness of the Product shall be checked by the Buyer upon receipt of the Product in the presence of the Seller. After-sales claims regarding the completeness of the Product are not accepted.

2.The Manufacturer shall provide free repair of the Product only in the event of manufacturing defects.

3.The Manufacturer reserves the right to refuse free warranty repair in the following cases: If the Product shows signs of tampering or attempted self-repair.If unauthorized modifications to the design of the Product are found. If the Product has been operated in a manner inconsistent with its intended use or in an environment for which it is not designed. If the Product has been used with fittings other than those specified by the Manufacturer. If the warranty card contains corrections not certified by the Seller. If traces of storage of wet and damp things inside the furniture are found, as well as delamination, cracking and swelling of wooden parts and parts of the product due to direct contact with moisture. If the defect occurred as a result of failure to periodically retighten threaded joints as required.

4. The following faults are not covered by the warranty: Mechanical damage, both internal and external, resulting from improper use, installation or transportation by the Buyer, and damage resulting from exceeding the allowable load on the chair. Damage caused by corrosive substances and liquids coming into contact with the surface of the Product. Damage caused by the elements, fire, household factors. Creaking of the chair, the frame of the chair or separate parts of the chair, mechanisms or parts of mechanisms.

5. Warranty is valid in case of Warranty card, stamped by the Seller and signed by the Buyer. All the fields specified in the Warranty Card are obligatory!

6.The warranty period is set for 12 months. The duration of the warranty period is specified in the Warranty Card and is calculated from the date of sale of the Product.

7. The date of sale of the Product is specified in the Warranty Card.

8.The warranty on replaced components expires together with the warranty on the Product.

9. The Manufacturer declines responsibility for any damage, directly or indirectly caused by the purchased product to people, pets, property if it occurred as a result of non-compliance with the rules and conditions of use, installation of the product; deliberate or negligent actions of the consumer or third parties.

10. The service life of the chair is 3 years.

Warranty service and repair: _____

_____

_____

_____

_____

breedge

INSTRUCTION
FOR SAFETY AND TO USE

Dallas

EAC

Instructions for use and care of the chair.

1. Before reassembling the chair, always carry out a visual inspection - check the color of the product and the absence of mechanical damage.

2. Strictly follow the instructions of chair's assembly.

3. When assembling the chair check the strength of the structure and fixing elements.

4. Only use the chair in dry and heated rooms.

5. Do not use the armchair with underwear or bare torso - the upholstery material loses its properties, which leads to loss of elasticity, cracks and abrasions, which cannot be repaired.

6. Avoid hitting the chair and any other type of extreme stress.

7. Do not sit on the armrests or place dynamic stress on them.

8. It is not recommended to sit on the chair for more than one person, the recommended maximum load is 120 kg.

9. Try to use the mechanisms correctly and carefully.

10. Avoid direct exposure of the chair to sunlight.

11. Avoid exposing the armchair to direct sunlight and do not allow it to heat up more than 50°C.

12. Bo not place objects with sharp edges or corners on the chair.

13. Do not allow staining or dissolving substances to come into contact with the chair.

14. Do not use the chair as a means of transporting objects.

15. Do not stand with your feet on the seat of the chair or armchair, this may cause you to fall and be injured.

16. The chair is not intended for use in temperatures below 0°C.

17. If the chair is delivered in cold weather, start to use the chair after a day in a room temperature environment.

18. Check the mechanism, tighten the fasteners and fixing elements of the chair every 3 months.

19. For chair care we recommend to use vacuum cleaner and/or dry cleaning, choose means correctly, don't use solvents, acetone, petrol or any other substances not intended for this purpose.

ASSEMBLY INSTRUCTION

Office chair **Dallas**

A.Assembling Tools:

B.Assembling Parts:

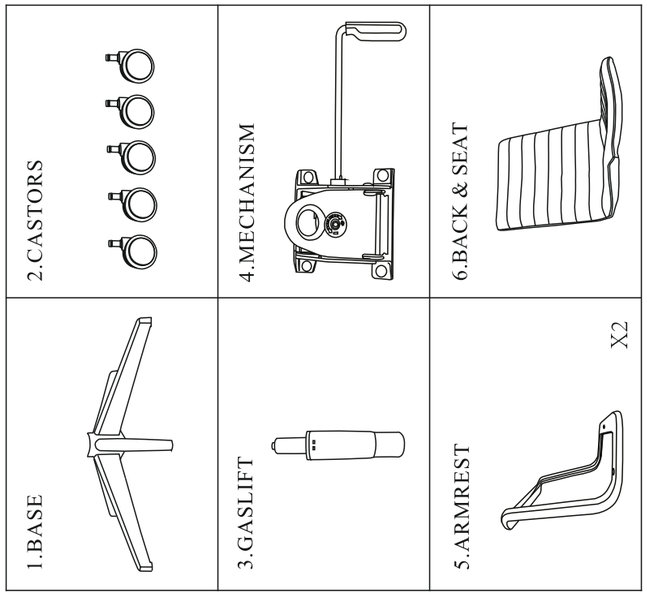

C.Assembly Process:

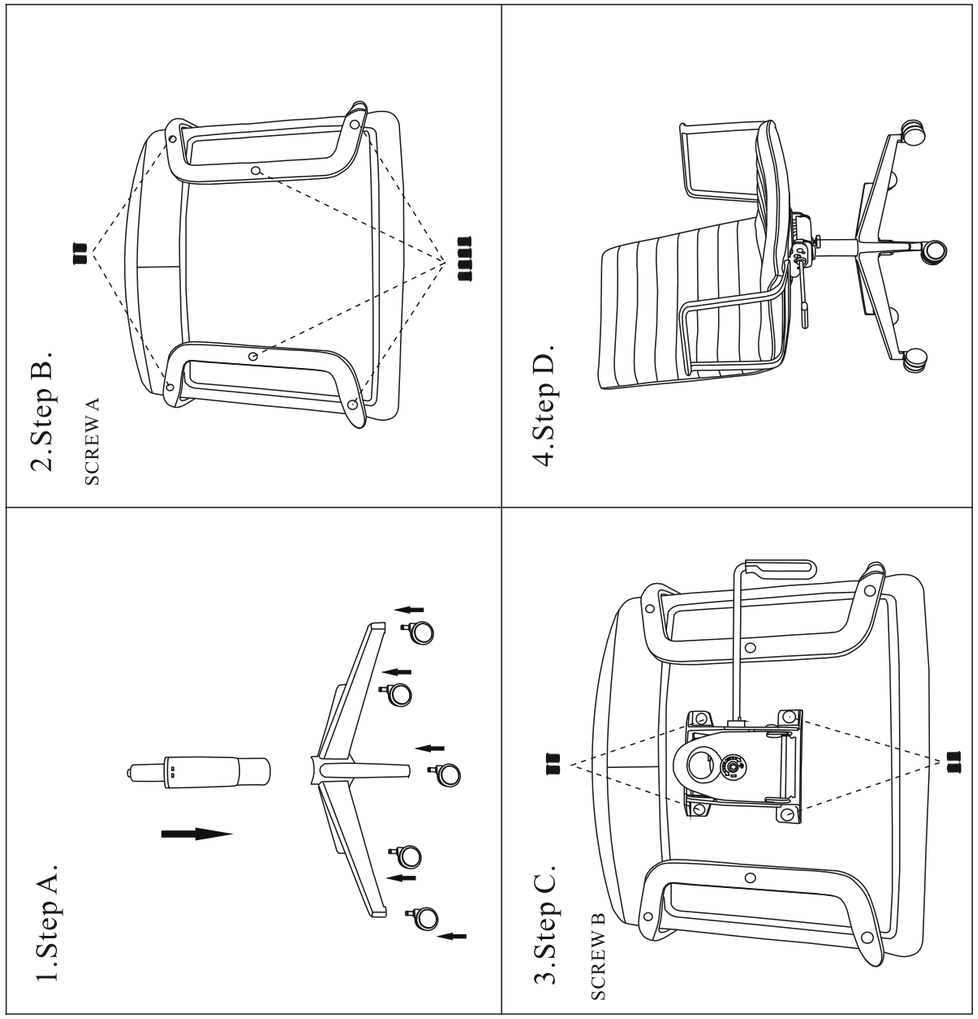

IMPORTANT SAFETY INFORMATION

Warning!

1. Leather armchairs only have a leather working surface (those parts that are in contact with the body), all other parts of the chair are made of leatherette.
2. Some new chairs from the package may have the smell of glue, as it is an integral part of the manufacturing process. The smell goes away on the second day or so when the room is ventilated.
3. Chairs contain small parts. Keep children away from assembling chairs.

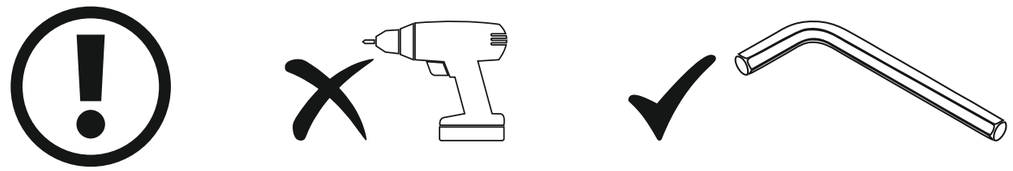

WARRANTY CARD

Product information

Seller	Breedge Trading LLC
Product	Office chair
Model	Dallas
Price	
Sales Date	
Phone	+971 4 238 3260
Product warranty period : **12 months**	

I have received the serviceable product in a complete set, with the Operating Instructions; I have read and agree with the terms of warranty repair, with the rules of using the product, its transportation and storage. I confirm that at the time of transfer the product does not have any defects that are not hidden.

Buyer's signature _____

Replacement of a poor-quality product with a new one, is made only in case of impossibility of repair. The warranty repair is carried out within 21 days from the date of application.